MURRAY

PUBLIC SERVICES

STORMWATER GUIDANCE MANUAL

March 1, 2008

MURRAY CITY STORMWATER GUIDANCE MANUAL

TABLE OF CONTENTS

Chapter 1
Introduction.....1 -1

Chapter 2
Murray City Storm Sewer Management.....2 - 1

Chapter 3
Murray City Land Disturbance Permit.....3 - 1

Chapter 4
How to Prepare a SWPPP.....4 - 1

Chapter 5
Stormwater Discharge Management from Construction Activities.....5 - 1

Appendices

CHAPTER 1

INTRODUCTION

Manual Purpose and Scope
General Requirements
Stormwater Management
Stormwater Management Strategies

Inadequate management of storm water runoff from development in a watershed increases flood flows and velocities, erodes and/or silts stream channels, pollutes water, overloads existing drainage facilities, undermines floodplain management, reduces groundwater recharge, and threatens public health and safety. Surface water runoff can carry pollutants into receiving waters. The potential impacts of these pollutants and the accompanying increased flows of runoff include:

- Changing natural ecosystems through sediment and pollution deposits that affect the quantity and quality of water flowing, the destruction of habitats, and the loss of plant and animal life;
- Posing significant health risks through increased bacteria;
- Introducing excessive nutrient loads to receiving waters which may accelerate eutrophication;
- Increasing metal deposits creating adverse toxicity for aquatic life;
- Reducing oxygen levels because of oil, grease, and organic matter; and
- Affecting animal and plant life adversely, due to changing temperatures of receiving waters.
- Increasing the incidence and level of flooding, endangering roads, public and private property and human life.
- Altering land surfaces can change the rate and volume of runoff which may result in erosion and slumping of streambanks; undercut root systems; increased erosion rates; and uniform and shallow streambeds, resulting in less varied aquatic habitats.

The adverse water quality and quantity consequences described above may result in substantial economic and/or human losses. The potential losses include, but are not limited to, increased wastewater and drinking water treatment costs, diminished property values, increased flood damages, as well as State and Federal fines associated with water quality violations.

MANUAL PURPOSE AND SCOPE

The purpose of this handbook is the following:

- Provide general guidance for selecting and implementing Best Management Practice (BMP) that will eliminate or reduce the discharge of pollutants from construction sites to waters of the state.
- To provide guidance on developing and implementing Stormwater Pollution Prevention Plans (SWPPP) that documents the selection and implementation of BMPs for a particular construction project.
- Give general performance criteria for storm sewer system management.
- Provide the framework for an informed selection of BMPs, and development and implementation of a site-specific SWPPP.

However, due to the diversity of climate, receiving waters, construction site conditions, this handbook is not intended to dictate the BMPs to be implemented, rather to provide a framework for BMPs selection. This book is to be used as a guide when preparing you SWPPP for your site. Each user of the handbook is responsible for working within their capabilities obtained through training and experience, and for seeking the advice and consultation of appropriate experts at all times.

GENERAL REQUIREMENTS

The need to protect our environment has resulted in a number of laws and subsequent regulations and programs. The Federal Clean Water Act is the regulation which controls stormwater pollution. There are, however, other regulations that directly or indirectly deal with the stormwater. In addition, stormwater programs are in place at a number of levels: federal, state, and local.

National Pollutant Discharge Elimination System (NPDES) programs on both the Federal and State levels are discussed below in relationship to the control of stormwater pollution. Other regulations may need to be considered on a case-by-case basis; however, the user is advised to contact all regulatory officials for further information regarding permits and applications.

National Pollutant Discharge Elimination System (NPDES). In 1972, the Federal Clean Water Act was amended to prohibit any point source discharge of pollutants to waters of the United States, unless the discharge is in compliance with a NPDES permit. In 1990, the U.S. Environmental Protection Agency (USEPA) published final regulations establishing application requirements for stormwater discharge permits for specific categories of industries and municipalities.

Utah Pollutant Discharge Elimination System (UPDES). In Utah, the Division of Water Quality administers the NPDES program, issuing UPDES permits for stormwater discharges into receiving waters. The permit requires a Stormwater Pollution Prevention Plan (SWPPP) which applies specific BMPs on a site-by-site basis to reduce stormwater pollution.

Salt Lake County Flood Control Permit. For discharges to creeks, rivers and Salt Lake County flood control systems, a Flood Control Permit is required. The permit application requires design drawings and storm flows which discharge into the system.

Murray City Land Disturbance Permit and Murray City Storm Sewer Management Plan. Murray City requires every construction site over 1 acre to obtain a Land Disturbance Permit. The permit requires the same Stormwater Pollution Prevention Plan that is required by the UPDES Permit. Murray City also requires all construction sites to have a Storm Sewer System Management Plan. Both of these will be discussed in the proceeding chapters.

STORMWATER MANAGEMENT

For many years the effort to control stormwater focused on flooding issues and removing water from urban areas. Stormwater was generally permitted through flood control programs. In recent years regulatory programs have been established to reduce all pollution sources entering water ways. Programs have been established for point source and non-point source discharges. An emphasis of these programs is to contain pollution at the source, before it can cause environmental problems. It has been demonstrated that keeping pollutants out of water is more cost-effective than removing the pollutants once they are in the stormwater. However, if additional controls are needed, treatment of contaminated runoff could be required.

Stormwater management is the shift in emphasis toward comprehensive prevention orientated strategies. One of these strategies is the implementation of the BMPs. Comprehensive site management should include:

- Surface drainage;
- Flood control;
- Erosion and sediment control; and
- Reduction of pollutants in runoff.

This guidance document focuses on site controls which are designed to keep pollutants from entering storm drain systems and receiving waters. Both reducing the source of contamination, revegetation to keep soil on-site and diverting stormwater around the site to prevent contamination are examples of site controls. These controls and practices are called source controls and focus on prevention of pollutant introduction into stormwater runoff, or stopping the pollutant at the source, prior to reaching the drainage system or receiving waters.

It is more efficient and cost-effective to prevent water quality problems than to treat the water to eliminate the pollutants after the fact.

STORMWATER MANAGEMENT STRATEGIES

With so many controls available, a general strategy is helpful for determining which BMPs to implement first. The strategies below are listed in order of preference and cost effectiveness.

Alter the activities. The most preferred and least costly BMP are those that alter the activity to prevent pollution from either being produced or from leaving the site.

Enclose the activities. Enclosing an activity in a building is beneficial for two main reasons: 1) precipitation is prevented from coming into contact with the activity; and 2) drains inside of a building must discharge to a sanitary sewer system.

Cover the activities. If the activity cannot be placed inside a building, covering the area will prevent most precipitation from coming into contact with the activity and/or materials.

Separate the activities. Separate the activity that is the most significant source of pollutants from other activities that either cause little or no pollution. By separating the activities, one of the above strategies may be possible for one or more of the activities.

Treat the Stormwater. Treatment of the stormwater is the least preferred option because stormwater treatment devices are extremely expensive and generally not practicable. Most treatment systems are designed to constant flow streams with consistent or known levels of pollutants to be removed. This is not the case with most stormwater discharges.

CHAPTER 2

MURRAY CITY STORM SEWER MANAGEMENT

Standards and Specifications
General Storm Sewer Design Standards
Storm Sewer Management Plan Requirements

Drainage affects all parcels of property that lie within the City. The design and management of our storm sewer system is essential to preserve and promote the general health, welfare, and economic well being of the city. The purpose of this chapter is to provide guidance for the design and construction of storm sewer systems throughout the city.

STANDARDS AND SPECIFICATIONS

Specific technical aspects of all storm sewers shall be designed in accordance with this chapter and in accordance with, but not limited to, the following standards:

- APWA Standard Specifications and Standard Plans
- ASCE Manual No. 77

GENERAL STORM SEWER DESIGN STANDARDS

General Requirements:

- A discharge rate of 0.2 CFS or less per acre is allowed from a development into a City storm drain.
- No drywell sumps are allowed unless prior approval is obtained in writing by City Engineer.
- No curved alignments shall be allowed. Manholes or inlets shall be provided at all changes in direction, at the end of each storm sewer line, and at distances not greater than 400 feet.
- Minimum public storm sewer size shall be 15-in diameter unless prior approval is obtained in writing by City Engineer.
- Areas within the rights-of-way that require backfill shall be constructed with approved imported backfill.

Pipe Material: Pipe material must be approved by City Engineer. All pipe materials will require strict adherence to Murray City Engineering requirements and the industry standard (ASTM, ect.) material and installation requirements.

Design Storm: The minimum design storm used in calculating run-off in the design formula will be a 10 year 24 hour storm event. The minimum standard storm is as follows:

Storm Duration ***Rainfall***

Time (min)	*Intensity* (in/hr)	*Depth* (inches)
5	2.50	0.21
10	2.20	0.37
15	2.00	0.50
20	1.70	0.57
30	1.40	0.70
60	0.84	0.84
120	0.51	1.02
180	0.40	1.20
360	0.25	1.50
720	0.17	2.04
1440	0.09	2.16

STORM SEWER MANAGEMENT PLAN REQUIREMENTS

The storm sewer system management plan shall include sufficient information to allow the Division to evaluate the environmental characteristics of the project site, the potential impacts of all proposed development of the site, both present and future, on water resources, and the effectiveness and acceptability of the measures proposed for managing storm water generated at the project site. To accomplish this goal the storm sewer system management plan shall include the following:

- **Topographic Base Map:** A 1" = 100' topographic map of the site which extends to a minimum of 100 feet beyond the limits of the proposed development and indicates:
    1. Existing surface water drainage including streams, ponds, culverts,

ditches, sink holes, wetlands; and the type, size, elevation, etc., of nearest upstream and downstream drainage structures;

- Current land use including all existing structures, locations of utilities, roads, and easements:
    1. All other existing significant natural and artificial features;
    2. Proposed land use with tabulation of the percentage of surface area to be adapted to various uses; drainage patterns; locations of utilities, roads and easements; the limits of clearing and grading;
    3. Proposed Structural BMPs; and
    4. A written description of the site plan and justification of proposed changes in natural conditions.

- **Calculations:** Hydrologic and hydraulic design calculations for the pre-development and post-development conditions for the design storms specified in this chapter. These calculations must show that the proposed storm sewer system management measures are capable of controlling runoff from the site in compliance with this chapter. Such calculations shall include:
    1. A description of the design storm frequency, duration and intensity where applicable;
    2. Time of concentration;
    3. Soil curve number or runoff coefficients including assumed soil moisture conditions;
    4. Peak runoff rates and total runoff volumes for each watershed area;
    5. Infiltration rates, where applicable;
    6. Culvert, storm sewer, ditch and/or other storm water conveyance capacities;
    7. Flow velocities;
    8. Data on the increase in rate and volume of runoff for the design storms referenced in this chapter; and
    9. Documentation of sources for all computation methods and filed test results.

- **Soils information:** If a storm sewer system management control measure depends on the hydrologic properties of soil (e.g., infiltration basins), then a soils report shall be submitted. The soils report shall be based on on-site boring logs or soil pit profiles and soil survey reports. The number and location of required soil borings or soil pits shall be determined based on what is needed to determine suitability and distribution of soil types present at the location of the control measure.

- **Maintenance and repair plan:** The design and planning of all storm sewer management facilities shall include detailed maintenance and repair procedures to ensure their continued performance. These plans shall identify the parts or components of a storm sewer management facility that need to be maintained and the equipment and skills or training necessary. Provisions for the periodic review and evaluation of the effectiveness of the maintenance program and the need for revisions or additional maintenance procedures shall be included in the plan. A permanent elevation benchmark shall be identified in the plans to assist in the periodic inspection of the facility.

- **Landscaping plan:** The applicant must present a detailed plan for management of vegetation at the site after construction is finished, including who will be responsible for the maintenance of vegetation at the site and what practices will be employed to ensure that adequate vegetative cover is preserved. Where it is required by the BMPs, this plan must be prepared by a

registered landscape architect licensed in Utah.

- **Maintenance Easements:** The applicant shall ensure access to the site for the purpose of inspection and repair by securing all the maintenance easements needed. These easements must be binding on the property owner and all subsequent owners of the property and must be properly recorded with the County Recorder.

- **Maintenance agreement:**
  1. The owner of property to be served by an on-site storm sewer management facility must execute an inspection and maintenance agreement that shall operate as a deed restriction binding on the property owner and all subsequent property owners.
  2. The maintenance agreement shall:
     a) Assign responsibility for the maintenance and repair of the storm sewer management facility to the owner of the property upon which the facility is located and be recorded as such on the plat for the property by appropriate notation;
     b) Provide for annual inspection by the property owner for the purpose of documenting maintenance and report needs and ensure compliance with the purpose and requirements of this Chapter. The property owner will arrange for this inspection to be conducted by a qualified person who will submit a sealed report of the inspection to the Division. It shall also grant permission to the City to enter the property at reasonable times and to inspect the storm sewer system facility to ensure that it is being properly maintained;
     c) Provide that the minimum maintenance and repair needs include, but are not limited to: the removal of silt, litter and other debris, the cutting of grass, grass cuttings and vegetation removal, and the replacement of landscape vegetation, in detention and retention basins, inlets and drainage pipes and any other storm sewer management facilities. It shall also provide that the property owner shall be responsible for additional maintenance and repair needs consistent with the needs and standards outlined in this manual;
     d) Provide that maintenance needs must be addressed in a timely manner, on a schedule to be determined by Murray City Engineering Division;
     e) Provide that if the property is not maintained or repaired within the prescribed schedule, Murray City Engineering Division shall perform the maintenance and repair at its expense, and bill the same to the property owner. The agreement shall also provide that Murray City Engineering Division's cost of performing the maintenance shall be a lien against the property.
  3. The City shall have the discretion to accept the dedication of any existing or future storm sewer system facility, provided the facility meets the requirements of Murray City, and includes adequate and perpetual access and sufficient areas, by easement or otherwise, for inspection

and regular maintenance. Any storm sewer management facility accepted by the City must also meet the City's construction standards and any other standards and specifications that apply to the particular storm sewer management facility in question.

- **Storm Water Pollution Prevention Plan:** The applicant must prepare a SWPPP for all construction activities that complies with chapter 3 in this document.

CHAPTER 3

MURRAY CITY LAND DISTURBANCE PERMIT

General Requirements
Applications and Fees

As a result of the U.S. Environmental Protection Agency's (USEPA) Phase II rules published in December 1999, Murray City has developed a Municipal Stormwater Regulation Program. The overall goal of this program is to help reduce the storm water pollution to receiving waters and clean up the existing streams, rivers, and lakes. Storm water runoff from urban areas is collected and concentrated into storm sewer systems and conveyed to canals, creeks, rivers, and eventually to the Great Salt Lake. Construction sites lacking adequate storm water controls can contribute significant amounts of sediment and pollutants to streams and lakes. To reduce the water quality impacts of active construction sites, NPDES regulations require that many construction projects install and maintain appropriate erosion and sediment control, storm water management, and housekeeping BMPs. In addition, the NPDES regulations require municipalities to implement programs to control runoff from construction sites. These regulations include reviewing construction plans, conducting site inspections, and enforcing control measures necessary to minimize water quality impacts.

GENERAL REQUIREMENTS

Before any construction activity commences, every person must obtain a UPDES Permit from the State of Utah and a Land Disturbance Permit from Murray City in the following cases:

- Land activity disturbs one (1) or more acre of land.
- Land disturbing activity of less than one (1) acre of land, if such activity is part of a larger common plan of development that affects one (1) or more acres of land.
- Land disturbing activity of less than one (1) acre of land, if, the Division determines that such activity poses a unique threat to water or public health and safety.

If a permit is not required by either the City or the State of Utah the owner/developer is still required to submit and implement a storm water pollution prevention plan that includes BMPs.

APPLICATIONS AND FEES

UPDES Permit

The application, fee and requirements for the UPDES permit can be obtained by going to the State of Utah's Department of Water Quality website (https://secure.utah.gov/swp/client).

Murray City Land Disturbance Permit

To obtain a Land Disturbance Permit from Murray City you must submit a completed Land Disturbance Permit Request form. The following requirements must be met when submitting the application:

- Please refer to Chapters 4 and 5 for more detail regarding a SWPPP.
- A Storm Sewer System Management Plan as described in Chapter 2 of this manual, providing for storm sewer system management during the land disturbing activity and after the activity has been completed.

Every land disturbance permit shall expire and become null and void if substantial work authorized by the permit has not commenced within one hundred eighty (180) calendar days of issuance, or is not complete within eighteen (18) months from the date of the commencement of construction.

A non-refundable fee based on the area disturbed by development will be collected at the time the application and documents are submitted.

CHAPTER 4

HOW TO PREPARE A SWPPP

Construction Activities
Development of SWPPP
Collection Site Information
Develop Site Plan
Select Best Management Practices
Prepare Pollution Prevention Site Map
Prepare a Monitoring, Inspection, and Maintenance Plan
SWPPP Implementation
Submit Notice of Intent
Implement Controls
SWPPP Review and Modifications
Final Stabilization
Notice of Termination

All construction sites which disturb one acre or more or disturb less than one acre of land if such activity is part of a larger common plan must obtain a UPDES permit from the State of Utah and any activity that disturbs over one acre of land, must also obtain a Murray City Land Disturbance Permit. As a condition of these permits, a SWPPP must be developed and implemented. The SWPPP shall accurately describe the potential for soil erosion and sedimentation problems resulting from land disturbing activity and shall explain and illustrate the measures that are to be taken to control these problems. The length and complexity of the plan is to be commensurate with the size of the project, severity of the site condition, and potential for off-site damage. The plan shall also conform to the requirements found in this manual. A SWPPP example can be found in the appendices or by going to the State of Utah Department of Water Quality website.

CONSTRUCTION ACTIVITIES

This section is a guide to help prepare and implement the SWPPP. For exact UPDES Construction General Permit requirements please go to the State's website at http://www.waterquality.utah.gov/UPDES/SWCON02.pdf. The SWPPP is the focus of the UPDES stormwater permit and Murray City Land Disturbance Permit, and is the key to controlling pollutants in stormwater discharges.

The preparation of a SWPPP should not be a complicated process. Proper and careful development and implementation of the SWPPP will enhance the benefits of control measures. Responsibility for developing the SWPPP typically lies with the owner of the property that is being developed, or with the owner and operator of the construction project.

The SWPPP must be prepared before construction commences, ideally during the project planning and design phases. It is recommended that for large sites, the SWPPP be included as part of the bid package. Implementation of the SWPPP begins with the onset of construction activities, as the initial phase of construction is usually clearing and grubbing of the site, which exposes the area to uncontrolled stormwater runoff. Inspection and maintenance of best management practices occurs throughout the life of the construction project and until the site is stabilized.

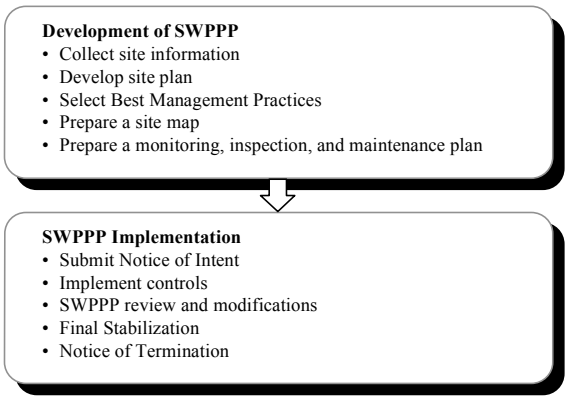

A two phase process is specified in this section for SWPPP preparation and implementation: development of SWPPP and SWPPP implementation. These phases are designed to identify SWPPP procedures at both preconstruction (development) and construction (implementation) phases.

DEVELOPMENT OF SWPPP

The development stage comprises the collection of construction site information, assessment of that information to determine best management practices and procedures, and compilation of the SWPPP.

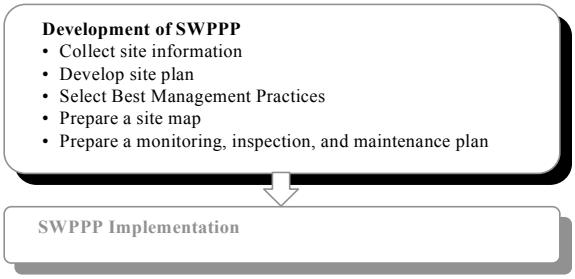

COLLECTION SITE INFORMATION

Several pieces of information should be collected before a Storm Water Pollution Prevention Plan can be prepared. This information will provide the technical basis for selection of erosion and sedimentation control, BMPs and post construction BMPs. A significant amount of this data must be included in the SWPPP, as specified by the UPDES permit and Murray City Land Disturbance Permit. The following items must be incorporated as part of your SWPPP.

Existing Conditions Map - Obtain a topographic site map with contour intervals of five (5) feet or less showing present conditions and proposed contours resulting from land disturbing activity of the proposed construction area. The map should indicate the existing land use of the site as well as the location of surface waters on or near the site boundaries.

Soils Information - Collect soil information about the site. This information can generally be obtained from the National Resources Conservation Service (NRCS). In some cases, soil sampling may need to be conducted. This information will typically identify soil constraints, design criteria, and slope stability.

Name of Receiving Water - Identify the receiving water(s) which ultimately collect runoff from your site.

Rainfall Data - Determine the amount of rainfall you anticipate in your design of stormwater management measures.

Measure Site Area - The UPDES stormwater permit requires an estimate of the total area of the site and the total area of the site that is expected to be disturbed by excavation, grading, or other activities. The area of the site can usually be found on the deed of sale for the property, the record plat, or site survey. The amount of area to be disturbed will generally need to be estimated based upon contractor knowledge of the construction project.

Determine the Runoff Coefficient - The runoff coefficient is the partial amount of the total rainfall which will become runoff. It provides an estimate of the development's impact on runoff after construction is complete. Consult design guides to obtain average runoff coefficient values for the specific land uses at the site.

DEVELOP SITE PLAN

The site plan will be developed based on information obtained during site collection and assessment and on objectives of the proposed construction project. Several pollution prevention principles should be considered when developing a site plan for the project. They are:

- Disturb the smallest vegetated area possible;
- Keep the amount of cut and fill to a minimum; and
- Limit impacts to sensitive areas such as:
  - Steep and/or unstable slopes,
  - Surface waters, including wetlands,
  - Areas with erodible soils,
  - Existing drainage channels.

Once the preliminary design is developed, a narrative description of the nature of the construction activity should be prepared and

included in the SWPPP. The narrative should include: a brief description of the project, a sequence of major soil disturbing activities involved in the project, and the approximate project duration.

SELECT BEST MANAGEMENT PRACTICES

At this stage, it should be possible to identify BMPs to be used during the construction activities. BMPS for erosion and sediment control are employed to limit the amount and rate of erosion and to capture the transported sediment before it has the opportunity to enter a stormwater collection system or water course. The selection of BMPs is site-specific with regard to activity, topography, soil conditions, and stormwater facilities. Refer to Chapter 5 of this manual for more information on selection of BMPs for construction activities.

After selection of controls, make a list of each control that you plan to use on the site. Include in this list a description of each control, its purpose, and why it is appropriate in this location.

PREPARE POLLUTION PREVENTION SITE MAP

The owner and/or designer should prepare a site map of the proposed construction area. The map should be of sufficient scale to clearly show on-site features. The following features should be delineated:

- Area of soil disturbance;
- Drainage patterns;
- Approximate slopes after major grading;
- Location of structural and nonstructural controls;
- Location of areas where stabilization practices are planned;
- Areas of cut and fill;
- Surface waters (including wetlands);
- All existing drainage ways, including intermittent and wet weather. Include any designated floodways or flood plains;
- The name of the receiving water(s) and the ultimate receiving water(s);
- Projected sequence of work;
- Specific details for: the construction of rock pads, wash down pads, and settling basins for controlling erosion; road access points. The use of dirt ramps for access ramps is prohibited.

PREPARE A MONITORING, INSPECTION, AND MAINTENANCE PLAN

The construction general permit requires that a monitoring, inspection, and maintenance plan be a component of the SWPPP. This portion of the SWPPP will identify procedures to ensure maintenance of control measures identified in the site plan remain in effective operating condition. To meet these objectives, the monitoring effort should have these elements:

- Site Inspection
- Record Keeping

Site Inspections

Personnel, with knowledge of correct installation and working BMPS, shall inspect areas exposed to soil erosion in accordance with a set inspection schedule. The Utah General Permit requires that inspections occur during construction "...at least once every seven calendar days and within 24 hours of the end of a storm that is 0.5 inches or greater."

Record Keeping

Records of all inspections, compliance certifications, and noncompliance reporting are to be retained for at least three years by the owner/developer.

These inspection reports should include the following information:

- scope of the inspection;
- name and qualifications of personnel inspecting;
- incidents of non-compliance;
- certification that the facility is in compliance with the SWPPP and the State General Permit; and
- signature of the inspector.
- major observations regarding the implementation of controls;

SWPP IMPLEMENTATION

The implementation stage occurs during the commencement of construction and consists of implementing BMPs, SWPPP review and modifications, and final stabilization of the site.

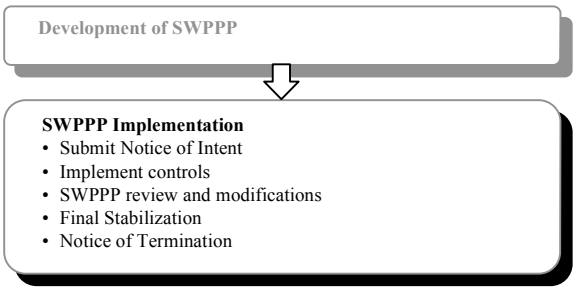

SUBMIT NOTICE OF INTENT

The owner of the construction site must obtain coverage under a general permit issued by the State. The construction general permit requires that a Notice of Intent (NOI) be submitted to the Utah Division of Water Quality (UDWQ) prior to the start of construction. The NOI is a notification that a construction project is about to begin, the location of the project, the responsible parties, and a certification that a SWPPP has been prepared and will be followed. The owner of the construction project is responsible for submitting the NOI. This can be done over the internet at https://secure.utah.gov/swp/client. Along with the Notice of Intent from the State of Utah the owner must submit an application for a Land Disturbance Permit from Murray City. See Chapter 3 for more information regarding Land Disturbance Permit.

IMPLEMENT CONTROLS

Construct or perform the controls which were selected for the SWPPP at the commencement of the construction project. The controls should be constructed or applied in accordance with standard specifications.

SWPPP REVIEW AND MODIFICATIONS

During the course of construction, unanticipated changes may occur which affect the SWPPP, such as schedule changes, phasing changes, staging area modifications, off-site drainage impacts and repeated failures of designed controls. These changes must be made known to the UDWQ and the SWPPP revised accordingly. During the preparation and review of the modified SWPPP, construction may continue with temporary modifications to the erosion and sediment control BMPS as approved by the Division.

Revisions to the SWPPP are also required when the properly installed systems are ineffective in the prevention of silt transport off of the site. This may be due to unforeseen site conditions or construction techniques which adversely affect the system as designed. Revisions to the SWPPP are also required if there is a new, deleted, or moved activity that could result in a significant amount of pollutants discharged in the stormwater.

FINAL STABILIZATION

After construction activities have been completed in a disturbed area, permanent stabilization should commence to prevent further erosion of soil from that area. All disturbed areas of a site should be stabilized once all construction activities are completed. Final stabilization is most often attained through seeding, mulching, and use of geotextiles or chemical stabilization methods.

NOTICE OF TERMINATION

The Notice of Termination (NOT) is typically the final task required to comply with the requirements of an UPDES stormwater permit for construction activity. The NOT communicates to the UDWQ that the construction activity has ceased and the area is stabilized.

CHAPTER 5

STORMWATER MANAGEMENT FROM CONSTRUCTION ACTIVITIES

Pollutants of Concern
Best Management Practices
Erosion Controls
Sediment Controls
Waterway Protection
Material Storage Management
BMP Selection
Define BMP Selection
Identify BMP Categories
Select Appropriate BMPs
Monitoring BMP Performance

Stormwater runoff becomes polluted by picking up soil particles and other pollutants (from construction materials) as it flows over surfaces where construction activities are occurring. The polluted stormwater is eventually deposited into rivers, streams, and lakes, where it may be harmful to plants and aquatic life. This chapter will address the impacts and origins of these potential pollutants, explain various methods to reduce pollutant discharge into stormwater systems, and aid in the selection of BMPs.

POLLUTANTS OF CONCERN

Sediment in stormwater is the primary pollutant from construction activities. Excess sediments can be an indicator that other pollutants such as heavy metals, nutrients and toxins from materials and chemicals used on construction sites may also be present. The following sections address stormwater runoff from pollutants associated with construction activities and the impacts to receiving waters.

Sediment

Soil erosion is the process by which soil particles are removed from the land surface by wind and water. Water erosion is the primary mechanism for the transport of sediment into stormwater systems and receiving waters. Plant root structures bind soils together thus allowing the soil structure to absorb rainfall and slow down the associated runoff. When trees and brush are removed, soils are exposed and may be transported off site. Natural depressions and hills which temporarily pond water are often removed by grading activities; rainfall then runs off the area, taking with it soil particles. Runoff from areas which have been cleared and grubbed generally have higher volumes and velocities of flow capable of carrying sediment particles.

Sediments can interfere with the survival of fish and other aquatic organisms. In slow moving sections of rivers where sediment loads can be deposited stream beds can be raised thus increasing the possibility of flooding during periods of high runoff.

Nutrients

Nitrogen and phosphorus from fertilizers, pesticides, construction chemicals, and solid waste are often generated at construction sites. Excessive discharge into waterways may result in excessive algae growth which can cause odor problems and reduce the amount of dissolved oxygen available to fish and other aquatic life.

Oil, Grease and Fuel

Oil, grease and fuel contain a wide array of hydrocarbon compounds, many which are toxic to aquatic organisms even at low concentrations. The main sources of oil and grease during construction activities are leakage from engines, spills at fueling stations, overfilled tanks, and waste oil disposal.

Other Toxic Chemicals

Construction of buildings and roads may require toxic or hazardous materials such as pesticides, herbicides, petroleum products, and building materials such as asphalt, sealants and concrete which may pollute stormwater running off the construction site. These types of pollutants often contain metals and other toxic materials which may be harmful to humans, plants and fish.

Miscellaneous Wastes

Miscellaneous wastes include wash water from concrete mixers, paints and painting equipment cleaning activities, solid wastes resulting from trees and shrubs removed during land clearing, wood and paper materials derived from packaging of building products, food containers such as paper, aluminum, and metal cans, and sanitary wastes. The discharge of these can lead to unsightly and polluted waterways.

BEST MANAGEMENT PRACTICES

Implementation and maintenance of BMPs for erosion and sediment control during construction activities is critical for stormwater quality management. The purpose of BMPs is to limit the amount and rate of erosion and to capture the transported sediment before it has the opportunity to enter a stormwater collection system or water course. The four major areas of BMPs implementation for construction activities are erosion controls, sediment controls, waterway protection, and material storage management. Specific BMPs are found at the end of this chapter.

EROSION CONTROLS

Erosion controls are used to limit erosion of disturbed areas by restricting stormwater runoff across the area or by using temporary stabilization methods.

Erosion controls employed in and around disturbed areas are designed to:

- Prevent stormwater runoff reaching open disturbed areas;
- Reduce velocities and volumes of runoff on open areas; and
- Stabilize the soil surface.

Controls to divert runoff away from disturbed areas should be in place prior to commencement of construction activities. Controls to be placed within disturbed areas should be constructed when work in the area has temporarily ceased.

Surface stabilization should be applied to areas that will remain undisturbed for longer than 14 days and should be implemented as soon as activities have ceased.

Erosion controls often overlap sediment controls, since diversion of runoff to prevent down gradient erosion also provides sediment control by diverting sediment-laden flows to controlled discharge points.

SEDIMENT CONTROLS

Sedimentation controls are used to filter runoff from disturbed areas and to trap sediment in a controlled area prior to leaving the site.

Sediment controls employed to trap sediment and filter stormwater runoff from disturbed areas include:

- Sediment barriers,
- Sediment traps, and
- Protection of storm drainage facilities.

Construction of sediment controls should take place prior to construction activities. Controls should be regularly inspected and maintained throughout the construction period. Removal of controls and reclamation of the area disturbed for placement of controls should take place when up gradient areas have achieved final cover.

WATERWAY PROTECTION

Waterway protection is used to protect drainage paths, stormwater collection systems and natural water courses from erosion and sedimentation.

Erosion and sediment controls should be constructed upgradient of waterways prior to construction activities and maintained throughout the project. Waterways should be protected not only from increased sediment but also from high velocity or volume of runoff which may erode channels and banks. For small volumes of runoff where flows are not concentrated, a sediment barrier (e.g., straw bale barrier, silt fence) or diversion dike can be constructed paralleling the top of bank to filter runoff and trap sediment before flows reach the waterway or to divert flows away from the waterway. For concentrated flow, energy dissipation and sediment traps or basins are required before discharge to the

waterway in order to reduce eroding velocity of flows and prevent sedimentation. A sediment basin may be required to act as a detention basin and control peak volumes of runoff if the increased volumes will impact the waterway.

No construction or placement of controls should occur within the banks or channel of a running water course without approval of the Utah Division of Water Rights. Vegetation around waterways should also be protected, since impact to vegetation will ultimately impact the waterway, a sufficient buffer should be established and remain untouched.

If a permanent discharge is proposed, some means of permanent protection should be installed, such as rip-rap outlet protection with permanent sediment trap up gradient. Non-stormwater discharges to waterways or existing stormwater systems are prohibited, with a few exceptions as specified in the UPDES general permit.

Where work is required within a waterway, local, state and federal requirements may govern. The following BMPs generally should be observed:

- Keep construction vehicles out of the waterway to the extent possible;
- Keep duration of activity to a minimum;
- Temporarily dam or divert flows when appropriate;
- Remove any sediment or construction debris immediately on completion of activity;
- Restore waterway to original course and complete stabilization of banks and channel immediately following associated activity;
- Stabilize adjacent areas and construct temporary silt barriers as necessary.

MATERIAL STORAGE MANAGEMENT

Material storage management involves proper handling, storage, and disposal of all materials which are potential contaminates to water supplies.

To protect stormwater from contamination other on-site controls may be required for materials introduced to the site for construction purposes. Materials such as fuel, oil, lubricants, paints, solvents, concrete-curing compounds, fertilizers, pesticides, and herbicides are a threat to water quality. Controls which address the storage, handling, and disposal of these materials are discussed below.

Storage

Toxic materials should be stored in a designated location with berms and other perimeter control to contain potential spills. On an unsecured site, toxic materials should be contained in a locked enclosure for limited access.

Where storage at the central location is impractical, materials used on a daily basis should be stored within structures or in vehicles where they will not be exposed to rainfall and therefore, have little chance of contaminating runoff. Materials should be stored in their original containers with clearly marked labels showing material, handling, and use specifications, primary constituents, and warnings. Only materials anticipated for use in project activities should be stored on-site.

Handling

All materials should be handled according to manufacturers' instructions. Precautions should be taken to avoid spills. In the event of a spill, containment by sandbags or other means should be employed immediately. The spilled material should then be collected and disposed of properly and the area remediated by removal and proper

disposal of contaminated dirt. Any structures such as pavement, concrete, culverts or storm drain inlets exposed to the spill should be examined and remediated as necessary. Proper documentation of the spill and notification of appropriate agencies should be performed in accordance with local, state, and federal requirements.

Disposal
No on-site burning of material, surface disposal, or burial of material is allowed. All non-toxic waste material is to be placed in a covered storage area or dumpster for prompt removal to disposal site. Toxic materials should be labeled and disposed of properly at an approved facility. Storage locations for waste materials should be located away from storm drainage systems.

BMPS SELECTION

The selection of BMPs is site-specific with regard to activity, topography, soil conditions and stormwater facilities. The selection is generally a three step process as shown below. Refer to "Use of BMPs Information Sheets" at the end of this section for specific selection information.

Define BMPs Objectives: Define locations where erosion is likely to occur and where other construction related pollutants may be generated.

Identify the BMPs Category: Select the appropriate category or categories of BMPs which address each objective.

Select the appropriate BMPs: BMPs are often selected from each category based on site constraints, construction requirements, and cost-effectiveness considerations.

DEFINE BMPS SELECTION

Each construction project is unique. Therefore, an understanding of the pollution risks of the construction activity is essential for selecting and implementing BMPs. Once the pollution risks are defined, BMPs objectives are developed and the BMPs are selected. Examples of the BMPs objectives for construction projects are:

Practice Good Housekeeping: Conduct activities in a manner which keeps potential pollutants from either draining or being transported off-site.

Contain Waste: Dispose of all construction waste in designated areas and keep stormwater from flowing on to or off of these areas.

Minimize Disturbed Areas: Only clear land which is actively under construction in the near term (e.g., within the next 6-12 months), minimize new land disturbance during the rainy season, and avoid clearing/disturbing sensitive areas (e.g., steep slopes and natural watercourses) and other areas where site improvements will not be constructed.

Stabilize Disturbed Areas: Provide temporary stabilization of disturbed soils whenever active construction is not occurring on a portion of the site. Provide permanent stabilization during finish grade and landscape the site.

Protect Slopes and Channels: Outside of approved grading plan area, avoid disturbing steep or unstable slopes. Safely convey runoff from the top of the slope, and stabilize slopes as quickly as possible. Avoid disturbing natural channels. Stabilize temporary and permanent channel crossings as quickly as possible, and ensure that increases in runoff velocity caused by the project do not erode the channel.

Control Site Perimeter: Upstream runoff should be diverted around or safely conveyed through the construction project. Local codes usually state that such diversions must not cause downstream property damage or be diverted into another watershed. Runoff from the project site

should be free of excessive sediment and other constituents.

Control Internal Erosion: Detain sediment-laden waters from disturbed, active areas within the site.

IDENTIFY BMPS CATEGORIES

Once the BMPs objectives are defined, it is necessary to identify the category of BMPs that is best suited to meet each objective. A category is a grouping of BMPs which are related in how they control stormwater pollution. The particular BMPs selected from each category depends on the specific site conditions, construction activities, and cost-effectiveness considerations.

To determine where to implement categories of BMPs, a map of the project site is prepared with sufficient topographic detail to show existing and proposed drainage patterns and existing and proposed stormwater control structures. The project site map should identify the following:

- Locations where stormwater enters and exits the site;
- Locations of permanent stormwater collection and control systems;
- Locations subject to high rates of erosion such as steep slopes or unlined channels;
- Locations of sensitive areas which must not be disturbed. Establish clearing limits around these areas to prevent disturbance by the construction activity;
- Locations of the boundaries of drainage areas if the site has more than one drainage outlet. Calculate the approximate area of each drainage area;
- Locations of entrances and exits to avoid tracking;
- Define areas where various contractor activities have a likely risk of causing a pollutant discharge.

Once identified on the site map, the categories of BMPs can be selected and located. In general, source control BMPs should be utilized wherever possible because it is better to ***prevent*** erosion and pollution than to ***remove*** sediments and pollutants.

SELECT APPROPRIATE BMPS

Many BMPs achieve more than one objective. This should be taken into consideration when selecting BMPs to achieve maximum cost-effectiveness. Not all BMPs will apply to every site, however; all BMPs should be considered for each site. Different BMPs may be needed for different phases of the construction project. Thus, the SWPPP may include a set of BMPs suitable for different stages of the project.

MONITORING BMPS PERFORMANCE

Once the BMPs have been selected and implemented, it is important to routinely monitor how well the BMPs work and to evaluate whether additional BMPs are required.

Personnel, with knowledge of correct installation and working BMPs, shall inspect areas exposed to soil erosion in accordance with a set inspection schedule. The Utah General Permit requires that inspections occur during construction "...at least once every seven calendar days and within 24 hours of the end of a storm that is 0.5 inches or greater."

USE OF BEST MANAGEMENT PRACTICES INFORMATION SHEETS

The BMPs Information Sheets attached are compiled from research and review of existing documents. These BMPs are presented as accepted practices currently in use nationwide. Variations from BMPs described herein will be acceptable, provided implemented controls meet the intent of Best Management Practices for controlling pollution during construction activities.

Each information sheet is organized into three main sections:

- Heading
- Main Body
- Side Bar

HEADING

In addition to the title of the BMPs, a 2 to 4 letter abbreviation of the BMPs is provided in the upper right-hand corner. The abbreviation may be used for identifying the selected BMPs on the Storm Water Pollution Prevention Plan (SWPPP) Site Map. The information sheet for the selected BMPs can then be attached to the SWPPP to provide details regarding purpose, installation, and maintenance.

MAIN BODY

The main body in each BMPs sheet contains the following information:

- Example illustration of the BMPs;
- Description of the BMPs;
- Applications;
- Installation/application criteria;
- Maintenance; and
- Limitations.

SIDE BAR

The side bar identifies the objectives of the BMPs, pollutants targeted by the BMPs, and an indication of the level of effort and costs to implement.

<u>Objectives:</u>
Housekeeping Practices
Contain Waste
Minimize Disturbed Areas
Stabilize Disturbed Areas
Protect Slopes/Channels
Control Site Perimeter
Control Internal Erosion

<u>Targeted Pollutants:</u>
Sediment
Nutrients
Toxic Materials
Oil & Grease
Floatable Materials
Other Waste

Each information sheet provides an indication of whether the BMPs will have a high, medium, or low/unknown impact on removing these constituents.

<u>Implementation Requirements:</u>
Costs:
- Capital Costs
- O&M Costs

Level of effort associated with:
- Maintenance
- Training

Each information sheet indicates the relative cost or level of effort (high, medium, low) to implement the BMPs.

BMP EXAMPLES
SWPPP/NOI/NOT

BMP: Building Repair, Remodeling, and Construction

BRRC

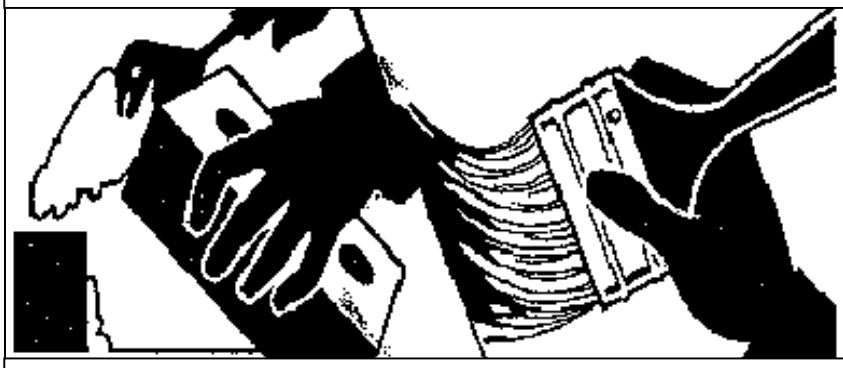

Objectives

- ■ Housekeeping Practices
- ■ Contain Waste
- □ Minimize Disturbed Areas
- □ Stabilize Disturbed Areas
- □ Protect Slopes/Channels
- □ Control Site Perimeter
- □ Control Internal Erosion

Description:

Prevent or reduce the discharge of pollutants to storm water from building repair, remodeling and construction by using soil erosion controls, enclosing or covering building material storage areas, using good housekeeping practices, using safer alternative products, and training employees.

Application:

- Use soil erosion control techniques if bare ground is temporarily exposed.
- Use permanent soil erosion control techniques if the remodeling clears buildings from an area that are not to be replaced.

Installation/Application Criteria:

- Enclose painting operations consistent with local air quality regulations and OSHA.
- Properly store materials that are normally used in repair and remodeling such as paints and solvents.
- Properly store and dispose waste materials generated from the activity.
- Maintain good housekeeping practices while work is underway.

Limitations:

- This BMP is for minor construction only.
- Hazardous waste that cannot be re-used or recycled must be disposed of by a licensed hazardous waste hauler.
- Safer alternative products may not be available, suitable, or effective in every case.
- Be certain that actions to help storm water quality are consistent with OSHA and air quality regulations.

Maintenance:

None.

MURRAY
PUBLIC SERVICES

Engineering Division
4646 South 500 West
Murray, Utah 84123
Tel. (801-270-2400

Targeted Pollutants

- ■ Sediment
- □ Nutrients
- ■ Toxic Materials
- ■ Oil & Grease
- ■ Floatable Materials
- ■ Other Waste

■ High Impact
☒ Medium Impact
☐ Low or Unknown Impact

Implementation Requirements

- □ Capital Costs
- ☒ O&M Costs
- ☒ Maintenance
- ☒ Training

■ High Impact
☒ Medium Impact
☐ Low or Unknown Impact

BMP: Concrete Waste Management

CWM

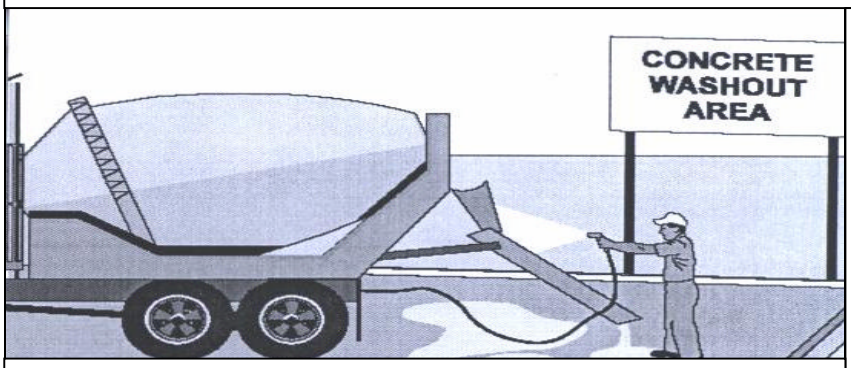

DESCRIPTION:

Prevent or reduce the discharge of pollutants to storm water from concrete waste by conducting washout off-site, performing on-site washout in a designated area, and training employees and subcontractors.

INSTALLATION/APPLICATION CRITERIA:

- Store dry and wet materials under cover, away from drainage areas.
- Avoid mixing excess amounts of fresh concrete or cement on-site.
- Perform washout of concrete trucks off-site or in designated areas d only.
- Do not wash out concrete trucks into storm drains, open ditches, streets, or streams.
- Do not allow excess concrete to be dumped on-site, except in designated areas.
- When washing concrete to remove fine particles and expose the aggregate, avoid creating runoff by draining the water within a bermed or level area. (See Earth Berm Barrier information sheet.)
- Train employees and subcontractors in proper concrete waste management.

LIMITATIONS:

- Off-site washout of concrete wastes may not always be possible

MAINTENANCE:

- Inspect subcontractors to ensure that concrete wastes are being properly managed.
- If using a temporary pit, dispose hardened concrete on a regular basis.

OBJECTIVES

- ☐ Housekeeping Practices
- ■ Contain Waste
- ☐ Minimize Disturbed Areas
- ☐ Stabilize Disturbed Areas
- ☐ Protect Slopes/Channels
- ☐ Control Site Perimeter
- ☐ Control Internal Erosion

MURRAY
PUBLIC SERVICES

Engineering Division
4646 South 500 West
Murray, Utah 84123
Tel. (801-270-2400

TARGETED POLLUTANTS

- ☐ Sediment
- ☐ Nutrients
- ■ Toxic Materials
- ☐ Oil & Grease
- ☐ Floatable Materials
- ■ Other Waste

- ■ High Impact
- ☒ Medium Impact
- ☐ Low or Unknown Impact

IMPLEMENTATION REQUIREMENTS

- ☒ Capital Costs
- ☐ O&M Costs
- ☒ Maintenance
- ☒ Training

- ■ High Impact
- ☒ Medium Impact
- ☐ Low or Unknown Impact

BMP Inlet Protection – Catch Basin Curb Bag

CBCB

Description:

Storm drain inlet protection measures prevent soil and debris from entering storm drain drop inlets. These measures are usually temporary and are implemented before a site is disturbed.

Application:

For temporary use on curb and gutter grates with inlets to capture sediment-laden storm water. Temporary controls should be constructed before the surrounding landscape is disturbed. Temporary drop inlet control measures are often used in sequence or with other erosion control techniques.

Installation/Application Criteria:

- Slip bag over grate.
- Tuck enclosure flap inside to completely enclose the grate.
- Place grate into frame street side first, then lower back edge into grate.

Limitations:

- Recommended for maximum drainage area of one acre.
- Fabric barriers are recommended for smaller, flatter drainage areas (slopes less than 5 percent leading to the drain)
- Ponding will occur at inlet.

Maintenance:

- Inspect inlet protection after every large storm event and at a minimum of once every two weeks.
- Remove sediment accumulated on or near sediment trap..
- Replace any part of bag or material that has been damaged.

Objectives

- ☐ Housekeeping Practices
- ☐ Contain Waste
- ☐ Minimize Disturbed Areas
- ☐ Stabilize Disturbed Areas
- ☐ Protect Slopes/Channels
- ■ Control Site Perimeter
- ■ Control Internal Erosion

MURRAY
PUBLIC SERVICES

Engineering Division
4646 South 500 West
Murray, Utah 84123
Tel. (801-270-2400

Targeted Pollutants

- ■ Sediment
- ☐ Nutrients
- ☐ Toxic Materials
- ☐ Oil & Grease
- ■ Floatable Materials
- ☐ Other Waste

■ High Impact
☒ Medium Impact
☐ Low or Unknown Impact

Implementation Requirements

- ☒ Capital Costs
- ☐ O&M Costs
- ☒ Maintenance
- ☐ Training

■ High Impact
☒ Medium Impact
☐ Low or Unknown Impact

BMP: Earth Berm Barrier for Storage Areas

EB

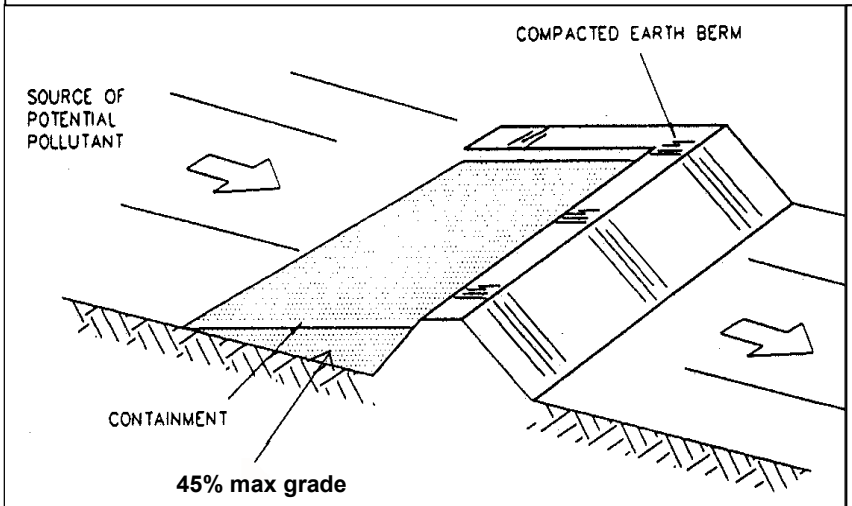

Objectives

- ☐ Housekeeping Practices
- ■ Contain Waste
- ☐ Minimize Disturbed Areas
- ☐ Stabilize Disturbed Areas
- ☐ Protect Slopes/Channels
- ■ Control Site Perimeter
- ☐ Control Internal Erosion

MURRAY PUBLIC SERVICES

Engineering Division
4646 South 500 West
Murray, Utah 84123
Tel. (801-270-2400

Description:

A temporary sediment barrier consisting of entrenched filter fabric stretched across and secured to supporting posts. Silt Fences are intended to intercept and detain small amounts of sediment from disturbed areas.

Application:

- Perimeter control: place barrier at downgradient limits of disturbance
- Sediment barrier: place barrier at toe of slope or soil stockpile
- Protection of existing waterways: place barrier at top of stream bank
- Inlet protection: place fence surrounding catchbasins

Installation/Application Criteria:

- Place posts 6 feet apart on center along contour (or use preassembled unit) and drive 2 feet minimum into ground. Excavate an anchor trench immediately upgradient of posts.
- Secure wire mesh (14 gage min. With 6 inch openings) to upslope side of posts. Attach with heavy duty 1 inch long wire staples, tie wires or hog rings.
- Cut fabric to required width, unroll along length of barrier and drape over barrier. Secure fabric to mesh with twine, staples, or similar, with trailing edge extending into anchor trench.
- Backfill trench over filter fabric to anchor.

Limitations:

- Recommended maximum drainage area of 0.5 acre per 100 feet of fence
- Recommended maximum upgradient slope length of 150 feet
- Recommended maximum uphill grade of 2:1 (50%)
- Recommended maximum flow rate of 0.5 cfs
- Ponding should not be allowed behind fence

Maintenance:

- Inspect immediately after any rainfall and at least daily during prolonged rainfall.
- Look for runoff bypassing ends of barriers or undercutting barriers.
- Repair or replace damaged areas of the barrier and remove accumulated sediment.
- Reanchor fence as necessary to prevent shortcutting.
- Remove accumulated sediment when it reaches ½ the height of the fence.

Targeted Pollutants

- ☐ Sediment
- ☐ Nutrients
- ■ Toxic Materials
- ☐ Oil & Grease
- ■ Floatable Materials
- ☐ Other Waste

■ High Impact
☒ Medium Impact
☐ Low or Unknown Impact

Implementation Requirements

- ☒ Capital Costs
- ☒ O&M Costs
- ☒ Maintenance
- ☒ Training

■ High Impact
☒ Medium Impact
☐ Low or Unknown Impact

BMP: Hazardous Waste Management

HWM

Objectives

- ☐ Housekeeping Practices
- ■ Contain Waste
- ☐ Minimize Disturbed Areas
- ☐ Stabilize Disturbed Areas
- ☐ Protect Slopes/Channels
- ■ Control Site Perimeter
- ☐ Control Internal Erosion

MURRAY
PUBLIC SERVICES

Engineering Division
4646 South 500 West
Murray, Utah 84123
Tel. (801-270-2400

Description:

Prevent or reduce the discharge of pollutants to stormwater from hazardous waste through proper material use, waste disposal, and training of employees and subcontractors.

Application:

Many of the chemicals used on-site can be hazardous materials which become hazardous waste upon disposal. These wastes may include:

- Paints and solvents; petroleum products such as oils; fuels and greases; herbicides and pesticides; acids for cleaning masonry; and concrete curing compounds.

In addition, sites with existing structures may contain wastes which must be disposed of in accordance with federal, state and local regulations, including:

- Sandblasting grit mixed with lead, cadmium or chromium based paints, asbestos, and PCBs.

Installation/Application Criteria:

The following steps will help reduce stormwater pollution from hazardous wastes:

- Use all of the product before disposing of the container.
- Do not remove the original product label; it contains important safety and disposal information.
- Do not over-apply herbicides and pesticides. Prepare only the amount needed. Follow the recommended usage instructions. Over-application is expensive and environmentally harmful. Apply surface dressings in several smaller applications, as opposed to one large application, to allow time for infiltration and to avoid excess material being carried off-site by runoff. Do not apply these chemicals just before it rains. People applying pesticides must be certified in accordance with federal and state regulations.

Limitations:

Hazardous waste that cannot be reused or recycled must be disposed of by a licensed hazardous waste collector.

Maintenance:

- Inspect hazardous waste receptacles and areas regularly.
- Arrange for regular hazardous waste collection.

Targeted Pollutants

- ☐ Sediment
- ☐ Nutrients
- ☒ Toxic Materials
- ☐ Oil & Grease
- ☐ Floatable Materials
- ☐ Other Waste

- ■ High Impact
- ☒ Medium Impact
- ☐ Low or Unknown Impact

Implementation Requirements

- ☐ Capital Costs
- ☐ O&M Costs
- ☒ Maintenance
- ☒ Training

- ■ High Impact
- ☒ Medium Impact
- ☐ Low or Unknown Impact

BMP: Silt Fence

SF

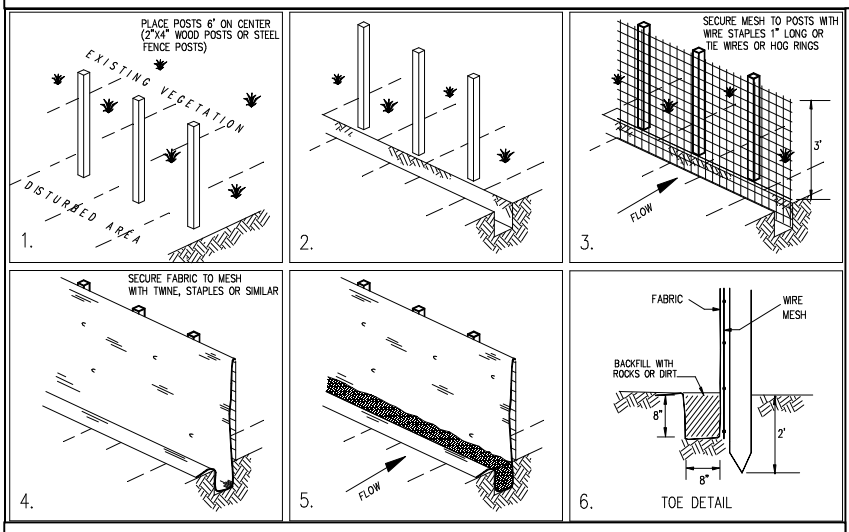

Objectives

- ☐ Housekeeping Practices
- ☐ Contain Waste
- ☐ Minimize Disturbed Areas
- ☐ Stabilize Disturbed Areas
- ■ Protect Slopes/Channels
- ■ Control Site Perimeter
- ■ Control Internal Erosion

MURRAY PUBLIC SERVICES

Engineering Division
4646 South 500 West
Murray, Utah 84123
Tel. (801-270-2400

Description:

A temporary sediment barrier consisting of entrenched filter fabric stretched across and secured to supporting posts. Silt Fences are intended to intercept and detain small amounts of sediment from disturbed areas.

Application:

- Perimeter control: place barrier at downgradient limits of disturbance
- Sediment barrier: place barrier at toe of slope or soil stockpile
- Protection of existing waterways: place barrier at top of stream bank
- Inlet protection: place fence surrounding catchbasins

Installation/Application Criteria:

- Place posts 6 feet apart on center along contour (or use preassembled unit) and drive 2 feet minimum into ground. Excavate an anchor trench immediately upgradient of posts.
- Secure wire mesh (14 gage min. With 6 inch openings) to upslope side of posts. Attach with heavy duty 1 inch long wire staples, tie wires or hog rings.
- Cut fabric to required width, unroll along length of barrier and drape over barrier. Secure fabric to mesh with twine, staples, or similar, with trailing edge extending into anchor trench.
- Backfill trench over filter fabric to anchor.

Limitations:

- Recommended maximum drainage area of 0.5 acre per 100 feet of fence
- Recommended maximum upgradient slope length of 150 feet
- Recommended maximum uphill grade of 2:1 (50%)
- Recommended maximum flow rate of 0.5 cfs
- Ponding should not be allowed behind fence

Maintenance:

- Inspect immediately after any rainfall and at least daily during prolonged rainfall.
- Look for runoff bypassing ends of barriers or undercutting barriers.
- Repair or replace damaged areas of the barrier and remove accumulated sediment.
- Reanchor fence as necessary to prevent shortcutting.
- Remove accumulated sediment when it reaches ½ the height of the fence.

Targeted Pollutants

- ■ Sediment
- ☒ Nutrients
- ☐ Toxic Materials
- ☐ Oil & Grease
- ☐ Floatable Materials
- ☐ Other Waste

■ High Impact
☒ Medium Impact
☐ Low or Unknown Impact

Implementation Requirements

- ☒ Capital Costs
- ☒ O&M Costs
- ☒ Maintenance
- ☒ Training

■ High Impact
☒ Medium Impact
☐ Low or Unknown Impact

BMP: Street Cleaning

SC

DESCRIPTION:

Reduce the discharges of pollutants to stormwater from street surfaces by conducting street cleaning on a regular basis or daily if needed..

APPROACH:

- Prioritize cleaning to use the most sophisticated sweepers, at the highest frequency, and in areas with the highest pollutant loading.
- Restrict street parking prior to and during sweeping.
- Increase sweeping frequency just before the rainy season.
- Proper maintenance and operation of sweepers greatly increase their efficiency.
- Keep accurate operation logs to track programs.
- Reduce the number of parked vehicles using regulations.
- Sweepers effective at removing smaller particles (less than 10 microns) may generate dust that would lead to concerns over worker and public safety.
- Equipment selection can be key for this particular BMP. There are two types used, the mechanical broom sweepers (more effective at picking up large debris and cleaning wet streets), and the vacuum sweepers (more effective at removing fine particles and associated heavy metals).

LIMITATIONS:

- Conventional sweepers are not able to remove oil and grease.
- Mechanical sweepers are not effective at removing finer sediments.
- Effectiveness may also be limited by street conditions, traffic congestion, presence of construction projects, climatic conditions and condition of curbs.

MAINTENANCE:

- Replace worn parts as necessary.
- Install main and gutter brooms of the appropriate weight.

OBJECTIVES

- ■ Housekeeping Practices
- ☐ Contain Waste
- ☐ Minimize Disturbed Areas
- ☐ Stabilize Disturbed Areas
- ☐ Protect Slopes/Channels
- ☐ Control Site Perimeter
- ☐ Control Internal Erosion

MURRAY
PUBLIC SERVICES

Engineering Division
4646 South 500 West
Murray, Utah 84123
Tel. (801-270-2400

TARGETED POLLUTANTS

- ■ Sediment
- ■ Nutrients
- ■ Toxic Materials
- ☐ Oil & Grease
- ☒ Floatable Materials
- ☐ Other Waste

- ■ High Impact
- ☒ Medium Impact
- ☐ Low or Unknown Impact

IMPLEMENTATION REQUIREMENTS

- ■ Capital Costs
- ■ O&M Costs
- ■ Maintenance
- ☒ Training

- ■ High Impact
- ☒ Medium Impact
- ☐ Low or Unknown Impact

BMP: Waste Disposal

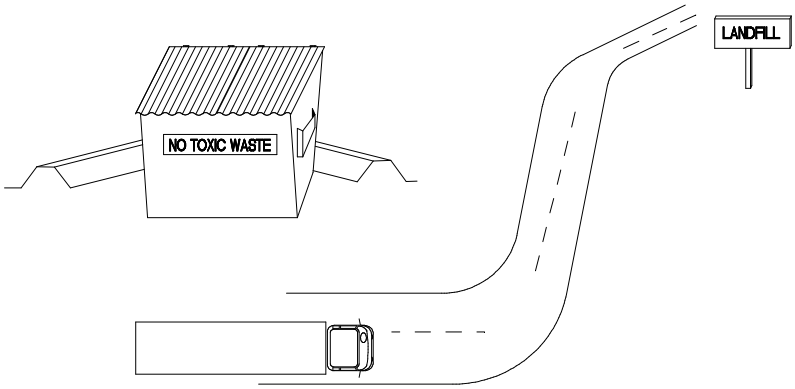

Objectives

- ■ Housekeeping Practices
- ■ Contain Waste
- ☐ Minimize Disturbed Areas
- ☐ Stabilize Disturbed Areas
- ☐ Protect Slopes/Channels
- ☐ Control Site Perimeter
- ☐ Control Internal Erosion

MURRAY
PUBLIC SERVICES

Engineering Division
4646 South 500 West
Murray, Utah 84123
Tel. (801-270-2400

Description:

Controlled storage and disposal of solid waste generated by construction activities.

Approach:

- Designate one or several waste collection areas with easy access for construction vehicles and personnel. Ensure no waterways or storm drainage inlets are located near the waste collection areas.
- Construct compacted earthen berm (See Earth Berm Barrier Information Sheet), or similar perimeter containment around collection area for impoundment in the case of spills and to trap any windblown trash.
- Use water tight containers with covers to remain closed when not in use. Provide separate containers for different waste types where appropriate and label clearly.
- Ensure all on site personnel are aware of and utilize designated waste collection area properly and for intended use only (e.g. all toxic, hazardous, or recyclable materials shall be properly disposed of separately from general construction waste).
- Arrange for periodic pickup, transfer and disposal of collected waste at an authorized disposal location. Include regular Porto-potty service in waste management activities.

Limitations:

- On-site personnel are responsible for correct disposal of waste

Maintenance:

- Discuss waste management procedures at progress meetings.
- Collect site trash daily and deposit in covered containers at designated collection areas.
- Check containers for leakage or inadequate covers and replace as needed.
- Randomly check disposed materials for any unauthorized waste (e.g. toxic materials).
- During daily site inspections check that waste is not being incorrectly disposed of on-site (e.g. burial, burning, surface discharge, discharge to storm drain).

Targeted Pollutants

- ☐ Sediment
- ☐ Nutrients
- ■ Toxic Materials
- ☐ Oil & Grease
- ☐ Floatable Materials
- ■ Other Waste

- ■ High Impact
- ☒ Medium Impact
- ☐ Low or Unknown Impact

Implementation Requirements

- ■ Capital Costs
- ■ O&M Costs
- ☒ Maintenance
- ■ Training

- ■ High Impact
- ☒ Medium Impact
- ☐ Low or Unknown Impact

SWPPP/ NOI/NOT LOCATION

The template for the Storm Water Pollution Protection, Plan Notice of Intent and Notice of Termination can be downloaded from the State of Utah DEQ Division of Water Quality site located at:

http://www.waterquality.utah.gov/UPDES/stormwatercon.htm